INTERNAL ENGINE PARTS




SEASTAR SOLUTIONS®

Four-Stroke Engine

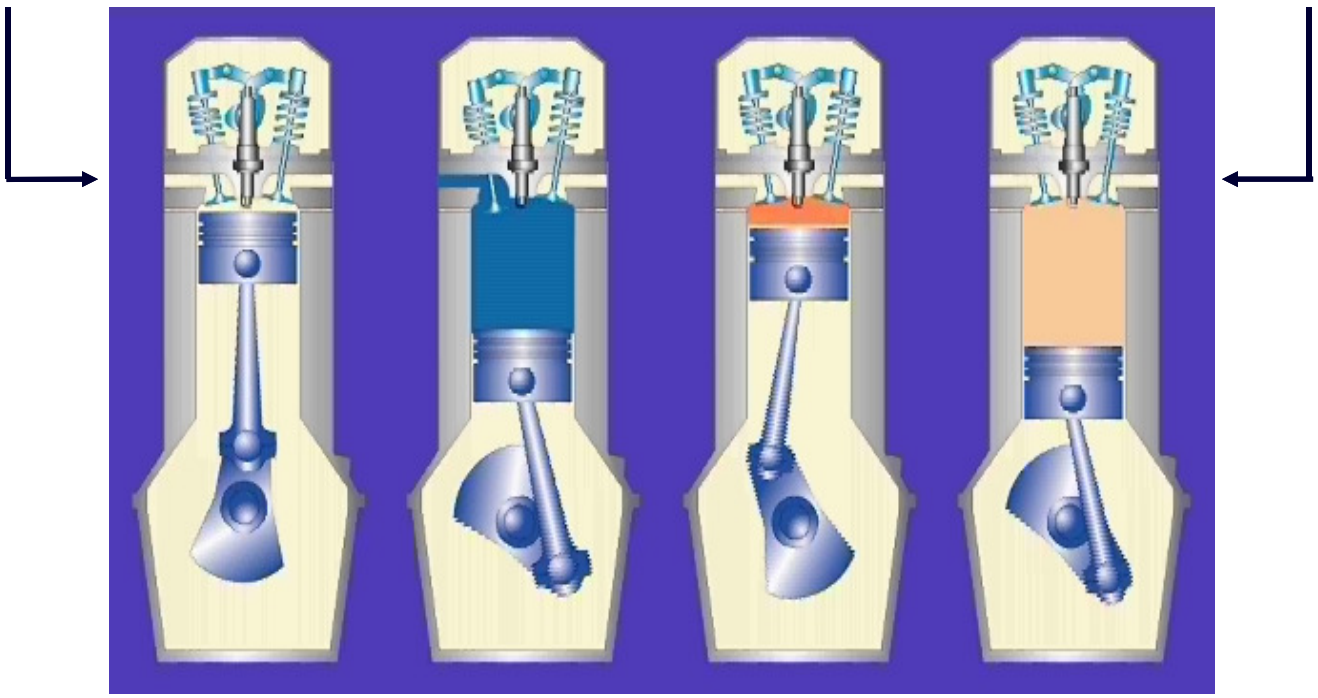

Typical four-stroke engines have an oil sump and recirculate the oil

SEASTAR SOLUTIONS

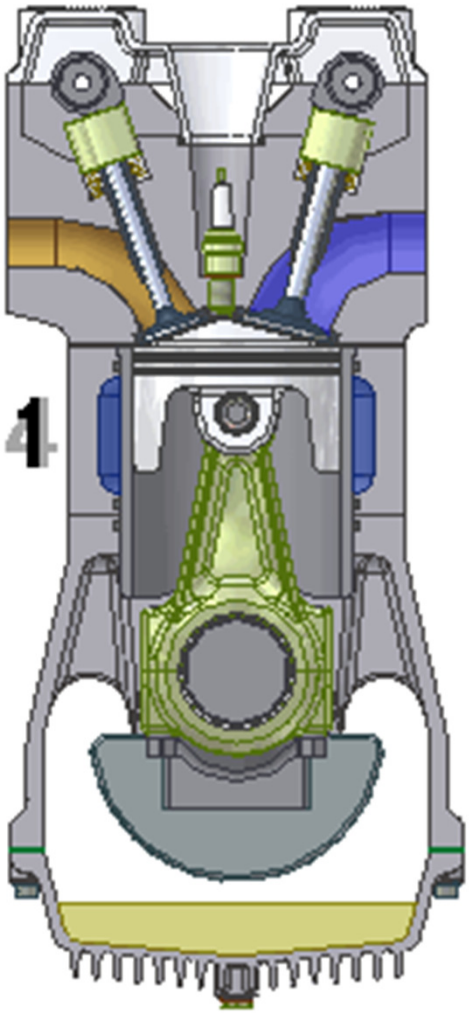
4
1

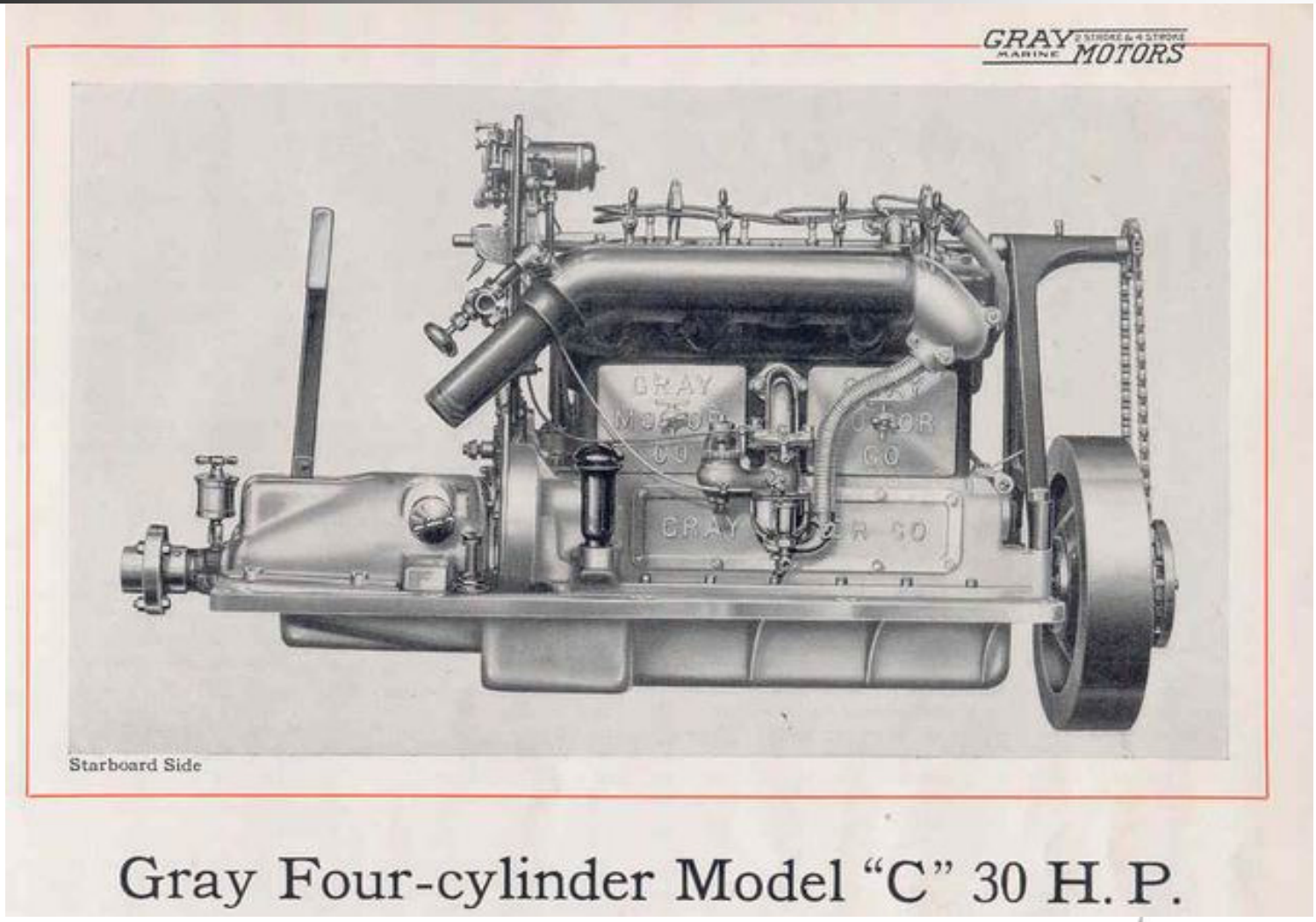

Gray Four-cylinder Model "C" 30 H. P.

SEASTAR SOLUTIONS

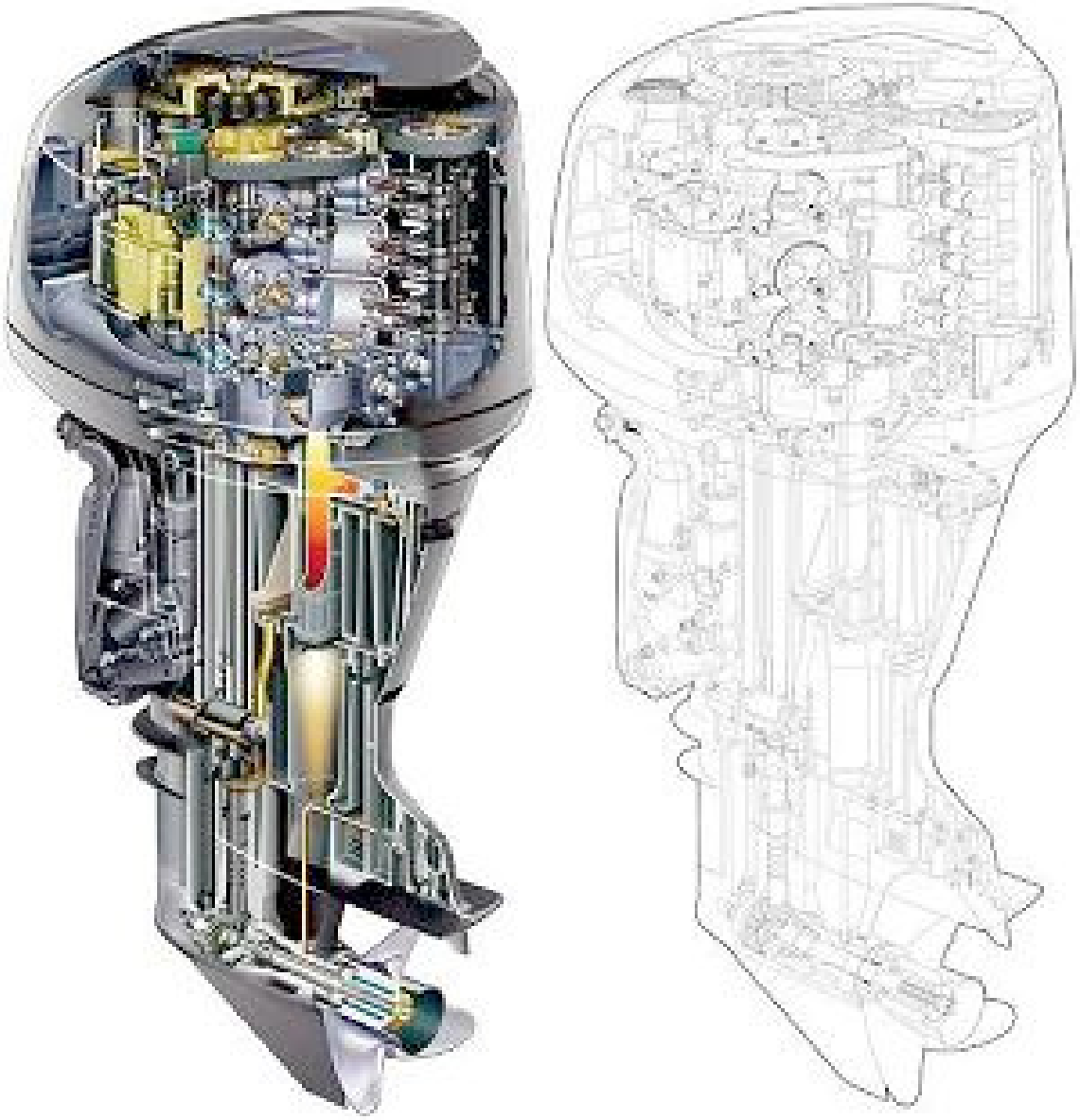

SEASTAR SOLUTIONS®

Marine Engines

Engine Maintenance

An internal combustion engine needs four basic ingredients to run efficiently and last a long time.

They are:

- Clean Oil (lubrication)
- Clean Fuel
- Clean Air
- Cooling system to remove excess heat

SEASTAR SOLUTIONS

Marine Engines

Oil: Let's start with the oil

- You must change both the oil and the filter at regular intervals recommended by the engine manufacturer. If that information is not available, then every 100-engine hours is the next best thing
- Engine hours, on most boats, are recorded on the tachometer
- Good oil does not wear out, but it does get dirty, so use the right oil for your engine and change it often

SEASTAR SOLUTIONS

Marine Engines

Fuel: There are two things that can mess up the fuel supply on a boat: Water and Dirt

- Invest in a good filter/water separator filter and make sure that you always carry a spare replacement cartridge
- On a diesel engine, problems are almost always fuel related. You can't have a filter that's too big or have too many of them
- If you store your fuel for an extended period of time (3 months or more), you should consider adding some type of fuel stabilizer to it

SEASTAR SOLUTIONS

Marine Engines

Air: Your engine requires lots of air

- Gas engines, check your flame arrester located on top of the throttle body or carburetor for oil, grease, or dirt. Remove the flame arrestor if it is dirty. Clean it with a non-explosive cleaning solution. **DO NOT** run your gasoline engine without the flame arrestor!
- On a diesel engine, check your air intake filter periodically

SEASTAR SOLUTIONS

Marine Engines

Cooling: Engines use the water that they are sitting in to remove excess heat created by the burning of fuel vapor during operation

- You should find out what type of cooling system your engine uses (Direct or Closed)
- Each engine has a water pump that pulls water from the lake, river or sea and sends it through the cooling system. Knowing where the pump is located and how to install a new impeller is a necessity
- Carrying a spare impeller can save much time and money when you really need it

SEASTAR SOLUTIONS

Two-Stroke Engine

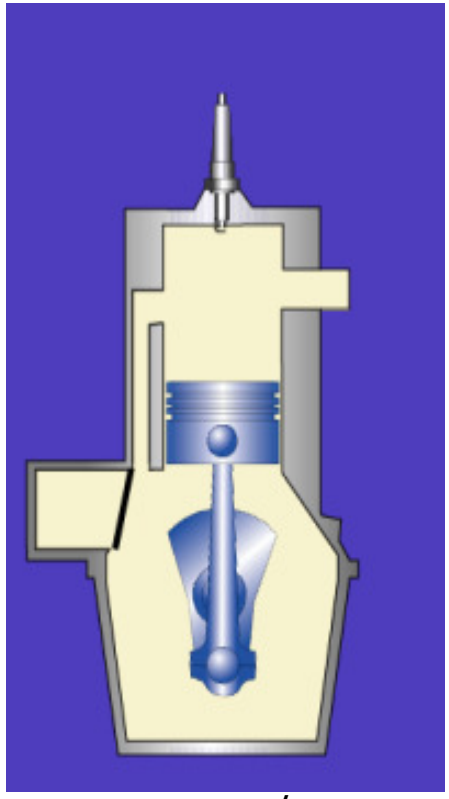

- More power / less weight
- Two-stroke engines mix oil with the fuel and consume the oil

SEASTAR SOLUTIONS

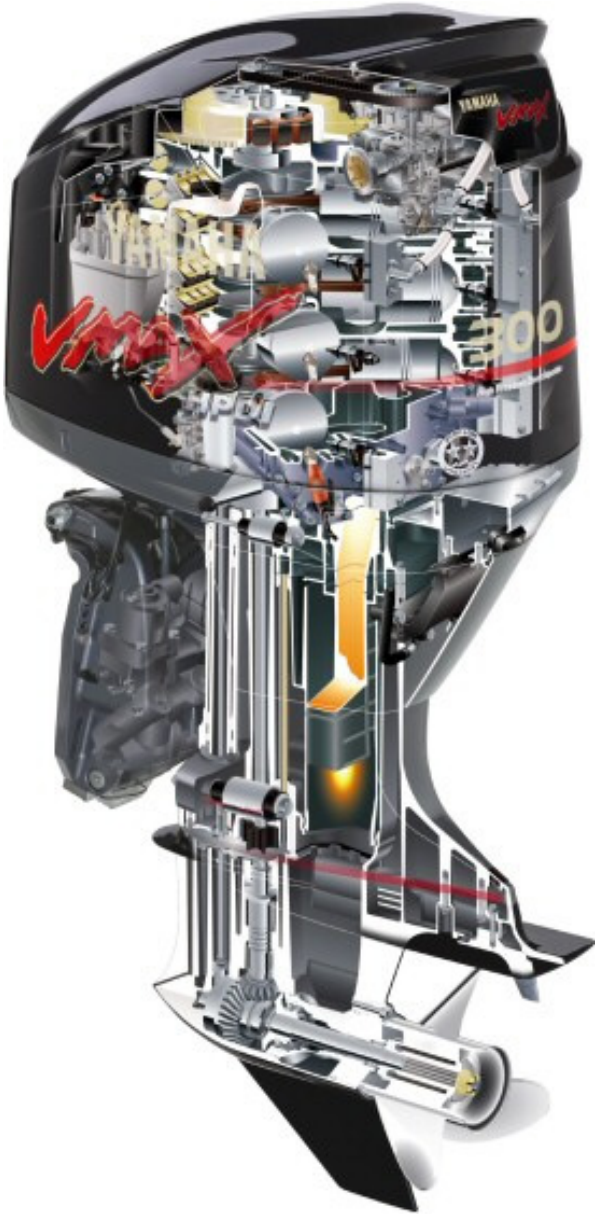

SEASTAR SOLUTIONS®

Today's Two Stroke Engine

- **Computer-driven injectors** press fuel into DFI engines at incredible speed and at the precise moment the fuel is needed for combustion. Direct Injection engines are different because the fuel is directly injected into the combustion chamber while the oil is injected directly into the crankcase. This process is efficient because the fuel is injected after the exhaust and intake ports have closed, and therefore more complete combustion of fuel occurs and more power is developed

SEASTAR SOLUTIONS

Outboard Engine Components

Pistons/ Piston Rings

- Our O/B pistons are die cast from a high silicone content aluminum alloy, dimensionally identical to the OEM piston
- Unlike forged pistons, our pistons and piston rings are completely interchangeable with the OEM piston
- All pistons are supplied with rings, wrist pin, and retaining clips

SEASTAR SOLUTIONS

Outboard Engine Components

Powerhead Gasket Kits

- Sierra features a complete line of powerhead gasket sets for outboard engines
- These gasket sets have been built, piece by piece, identically to match the OEM
- Our head gaskets feature a stainless steel fire ring for maximum corrosion resistance

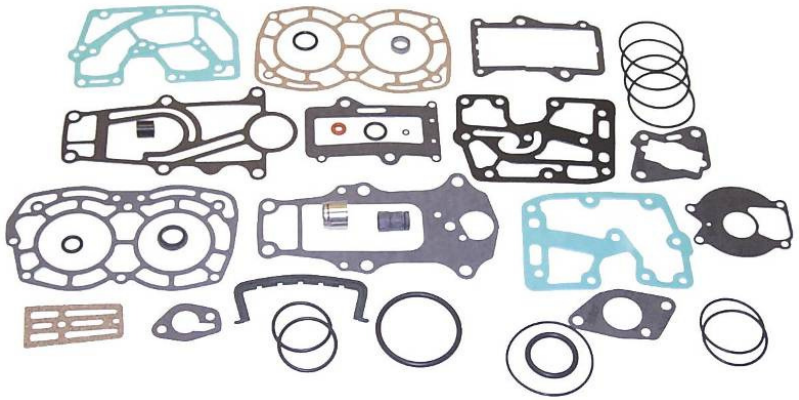

SEASTAR SOLUTIONS

Outboard Engine Components

- Outboard engine needle bearings are made from high carbon steel, heat treated, then precision ground to exact tolerance
- Engine needle bearings for outboard engines must stand up to extreme loads due to high RPM's
- Sierra offers direct OEM replacement needle bearings from an OEM supplier

SEASTAR SOLUTIONS